APPLICATION MODEL : KBT3-20F

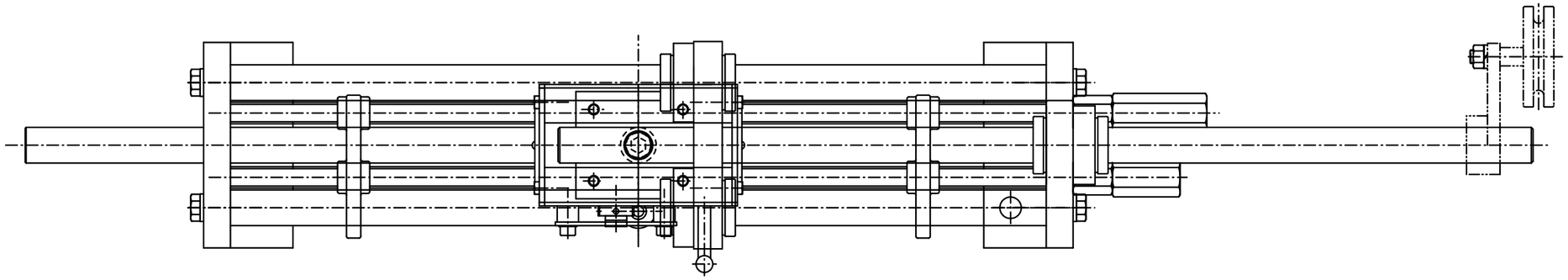

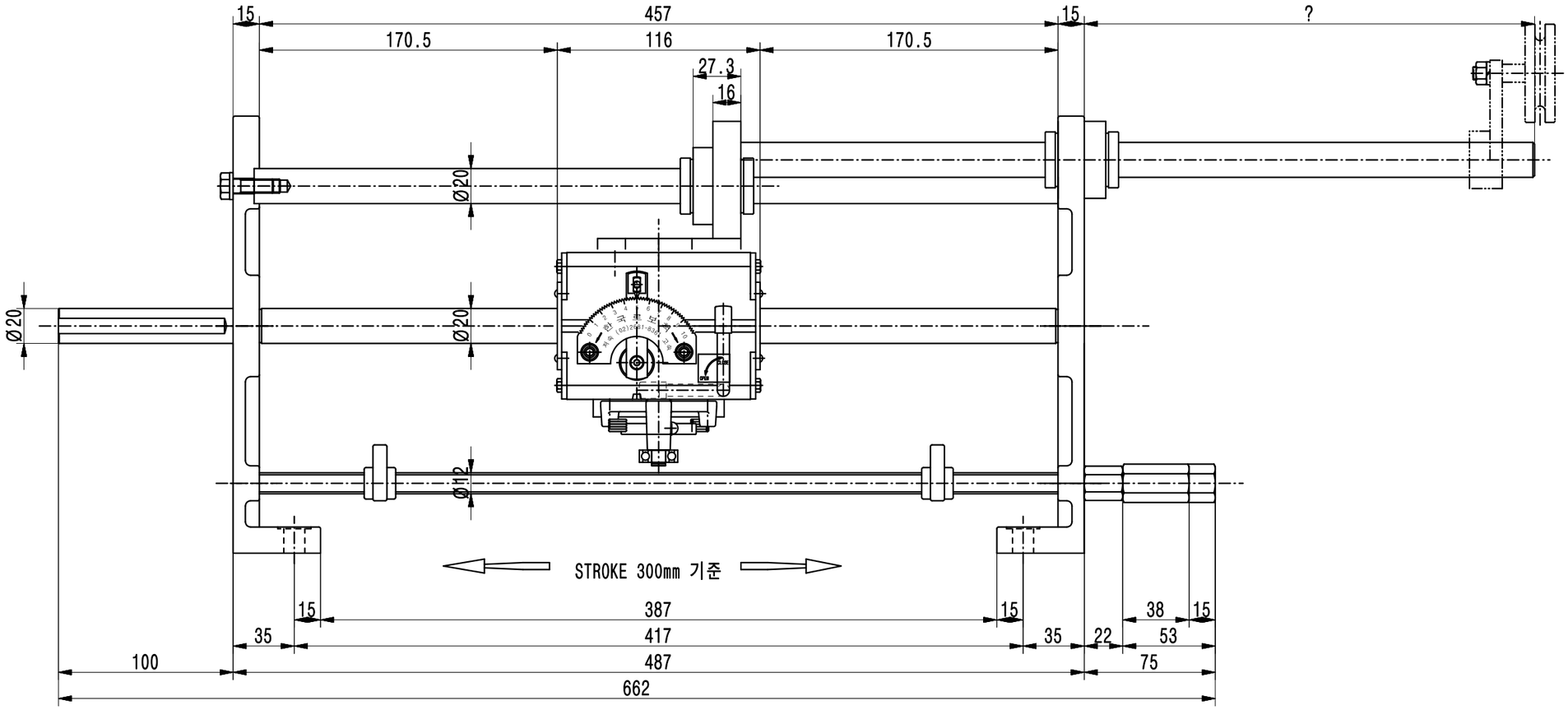

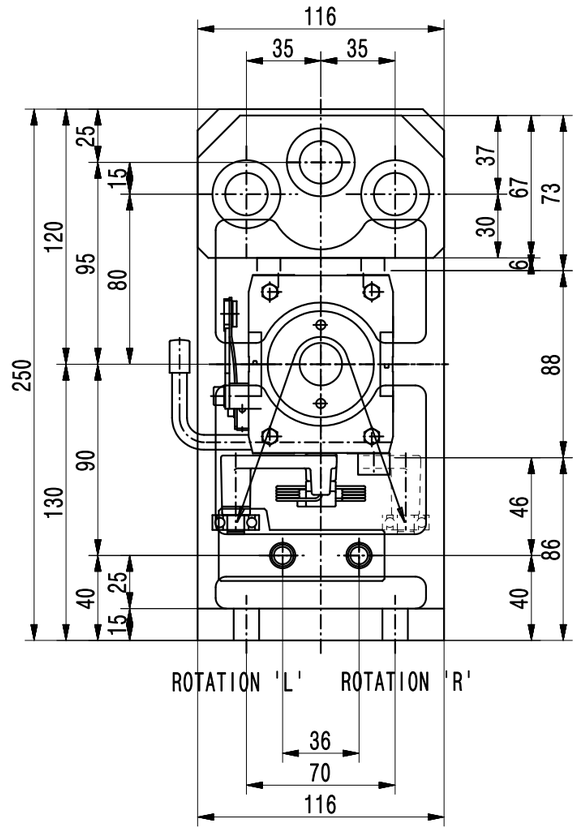

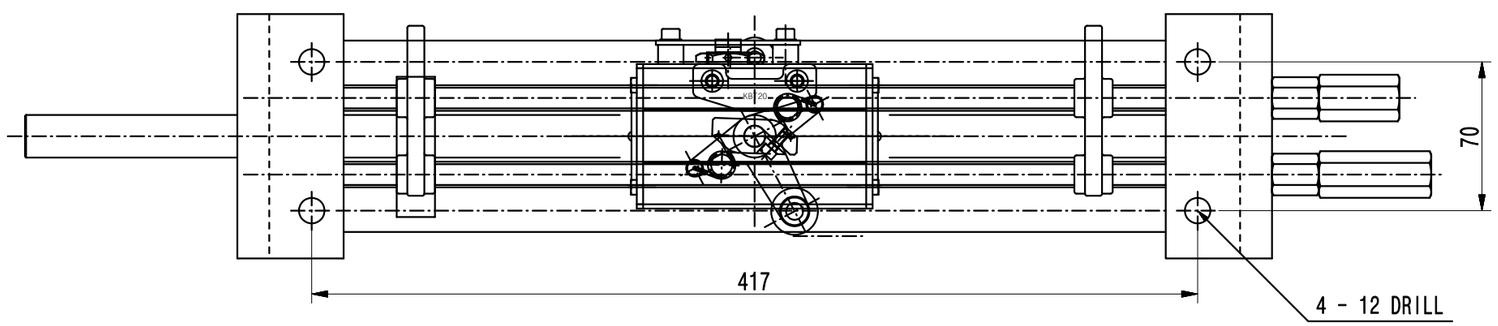

TECHNICAL DATA

Max. DRIVING FORCE	8 kg/f
Max. ROTATION	1500 RPM
Max. PITCH	0~15 mm
Max. STROKE	800 mm

DRAWN	DESIGN	CHECK	APPR.	SCALE	TATLE	
				3.0	BALL TRAVERS UNIT (STANDARD TYPE)	
				A3	APPLICATION MODEL: KBT3-20F	
KRC 한국로보척 KOREA ROBO CHUCK					DATE	2017. 08. 00
					DWG.NO	KBT3-20F-1000