APPLICATION MODEL : KBT4-20M

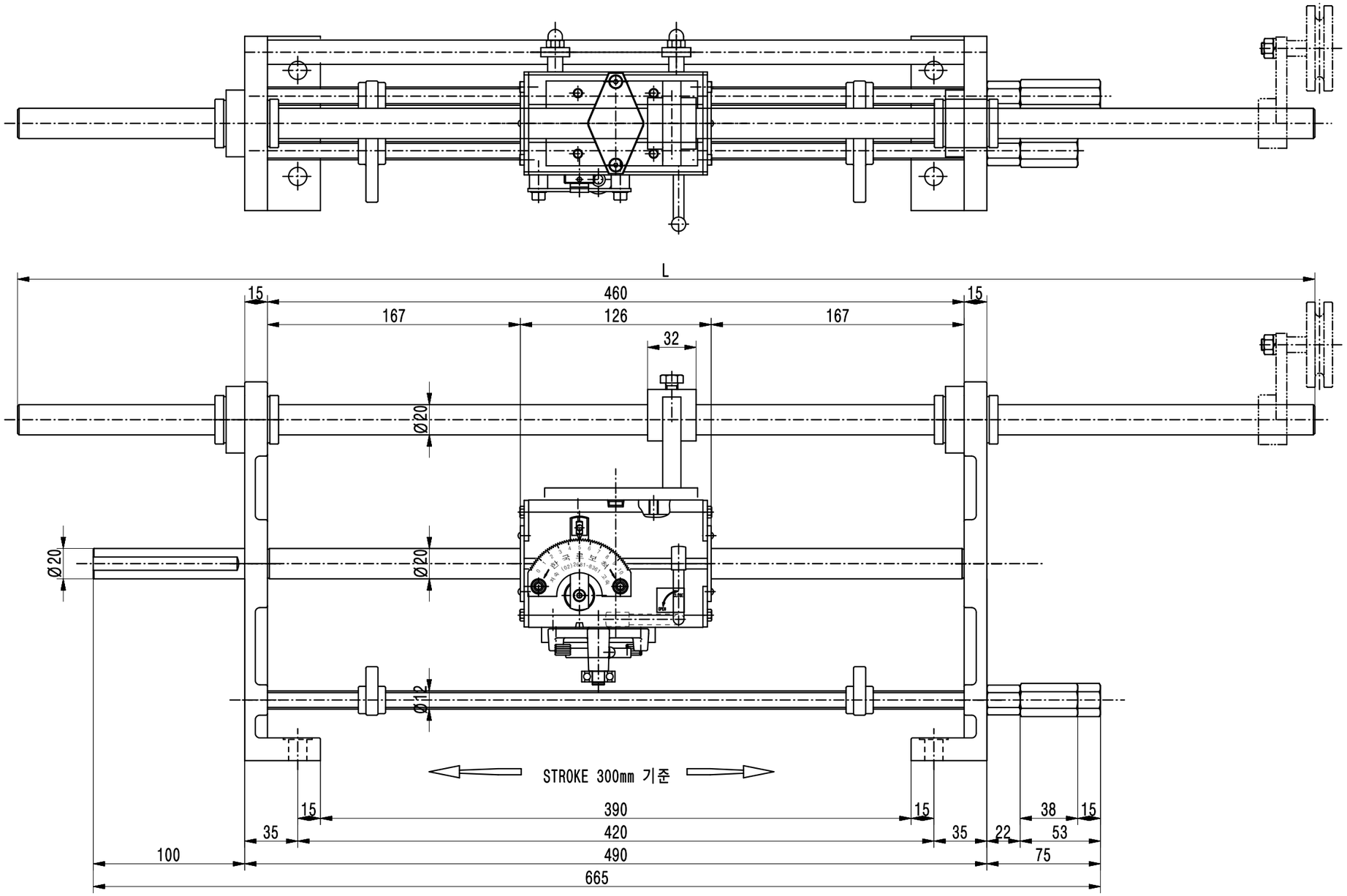

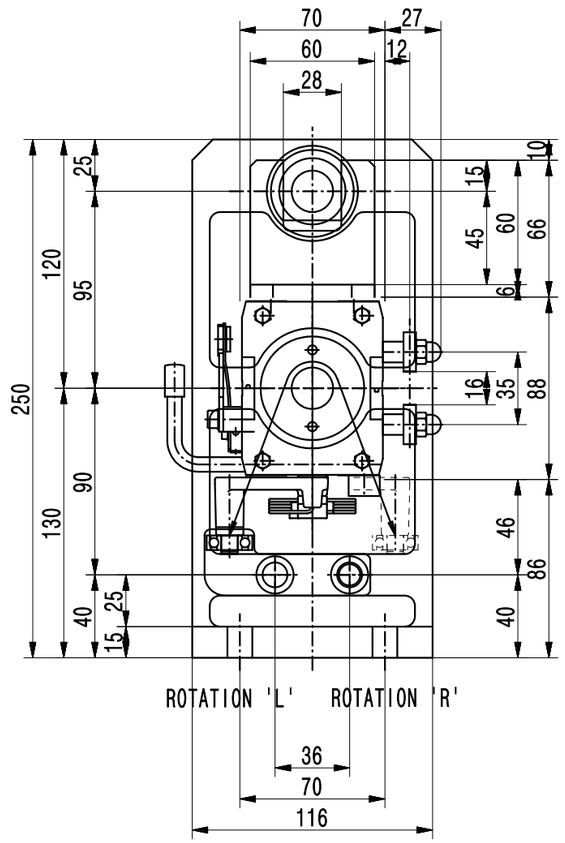

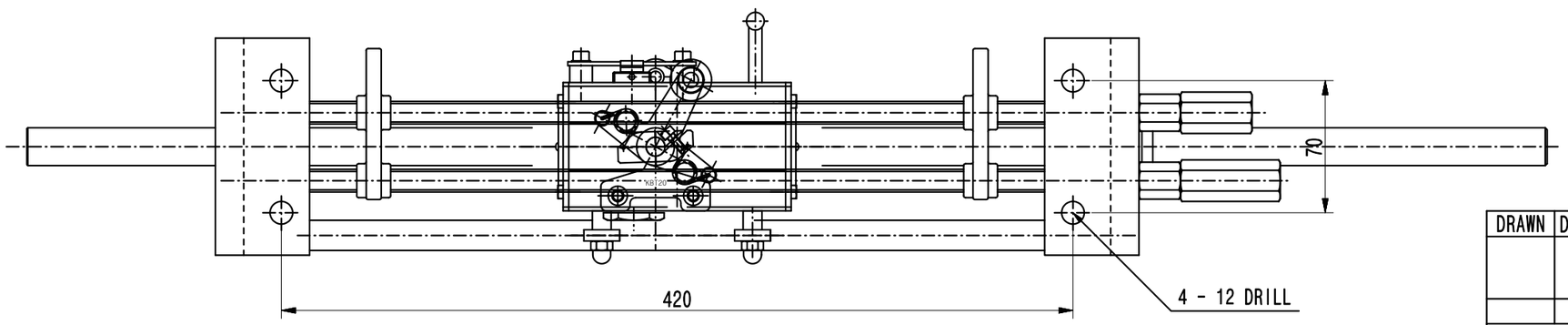

TECHNICAL DATA

Max. DRIVING FORCE	12 kg/f
Max. ROTATION	1500 RPM
Max. PITCH	0~15 mm
Max. STROKE	800 mm

DRAWN	DESIGN	CHECK	APPR.	SCALE	TATLE
				3.0	BALL TRAVERS UNIT (STANDARD TYPE)
				A3	APPLICATION MODEL: KBT4-20M

KRC 한 국 로 보 척 KOREA ROBO CHUCK

DATE	2017. 08. 00
DWG.NO	KBT4-20M-1000