APPLICATION MODEL : KBT4-30N

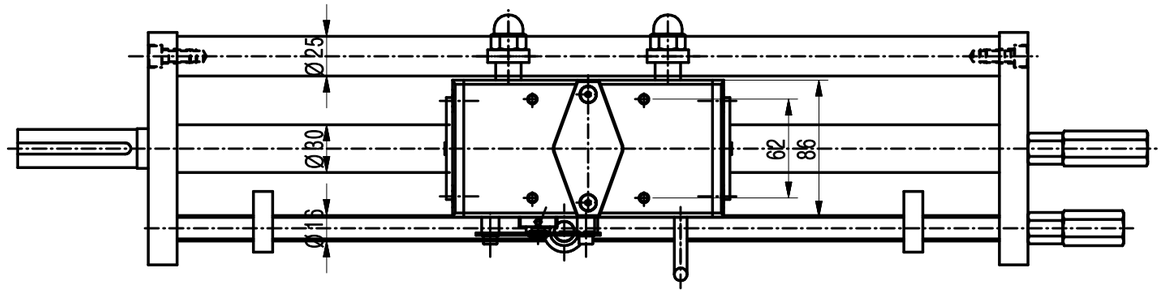

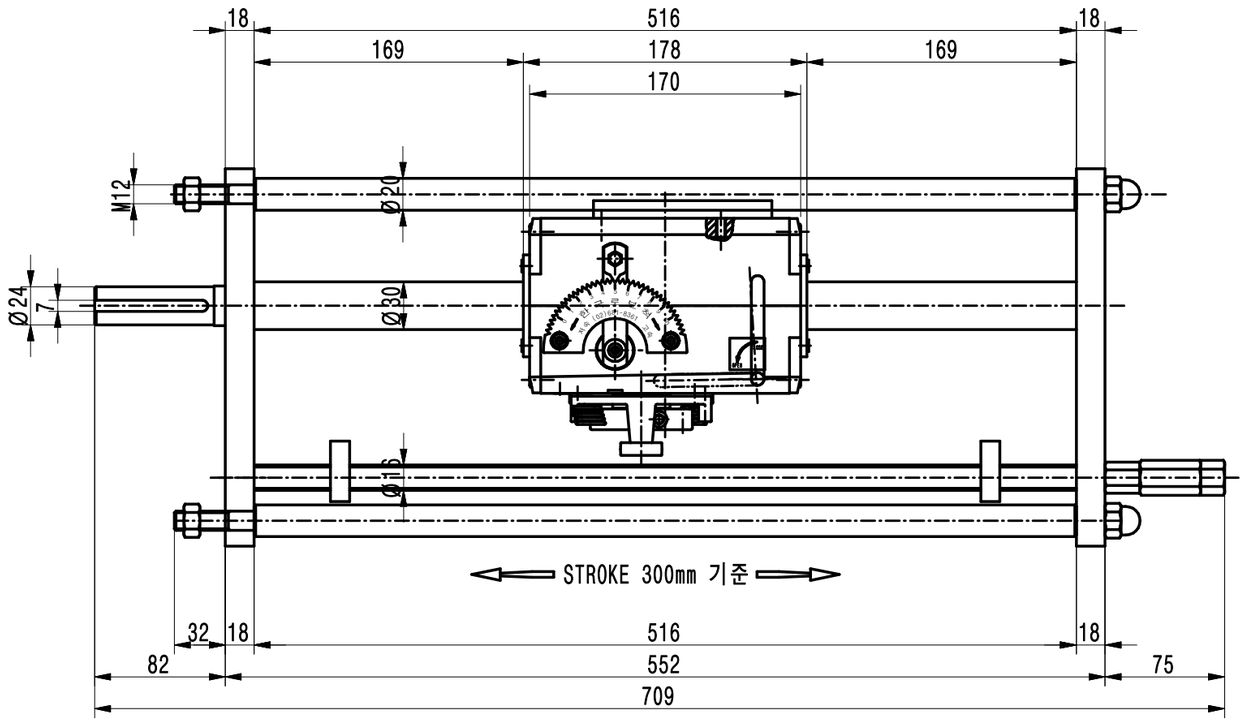

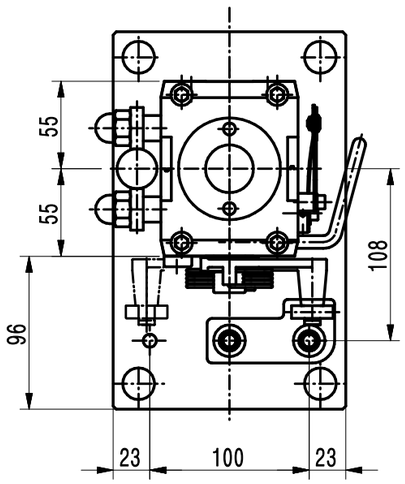

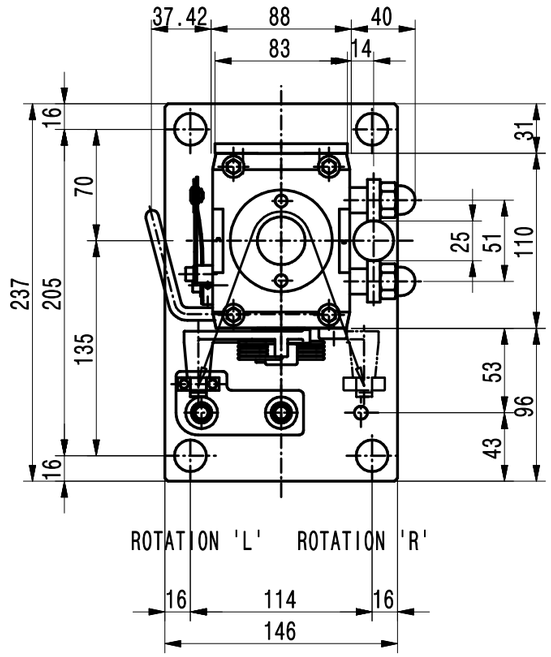

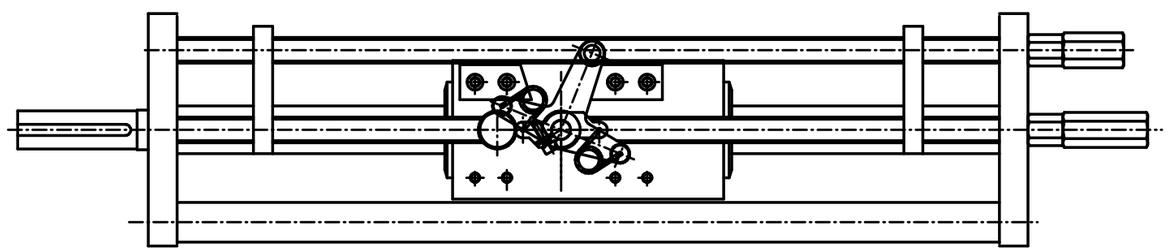

TECHNICAL DATA

Max. DRIVING FORCE	20 kg/f
Max. ROTATION	1000 RPM
Max. PITCH	0~24 mm
Max. STROKE	1200 mm

DRAWN	DESIGN	CHECK	APPR.	SCALE	TATLE
				4.0	BALL TRAVERS UNIT (STANDARD TYPE)
				A3	APPLICATION MODEL: KBT4-30N

KRC 한 국 로 보 척 KOREA ROBO CHUCK

DATE	2013. 04. 00
DWG.NO	KBT4-30N-1000