APPLICATION MODEL : KBT4-50F

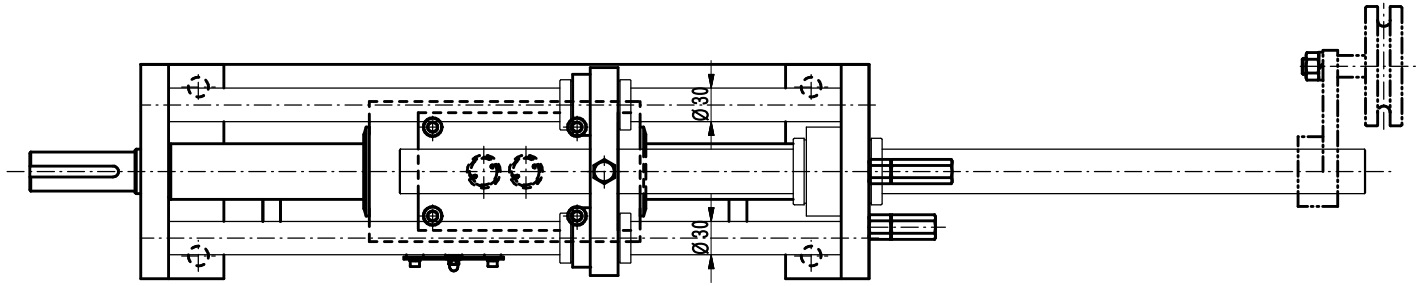

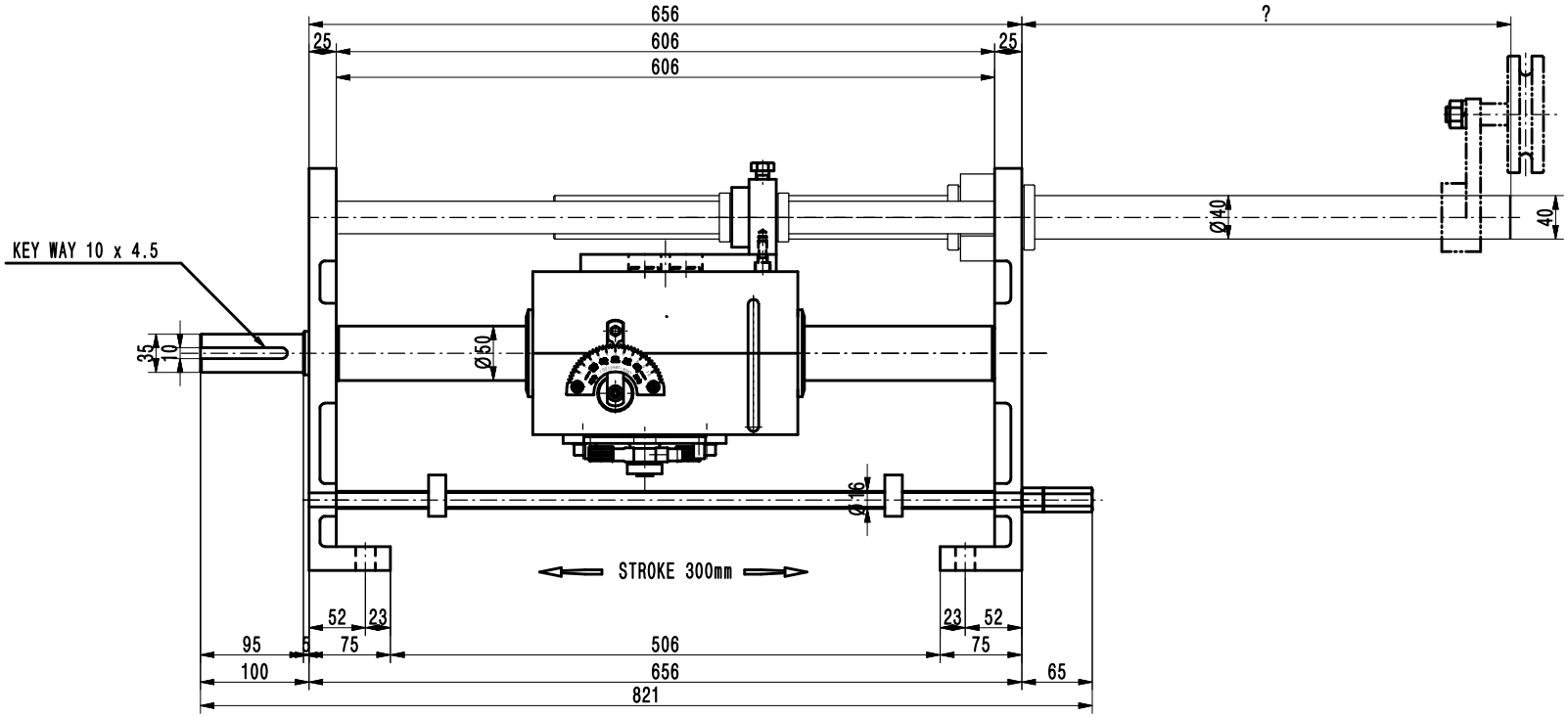

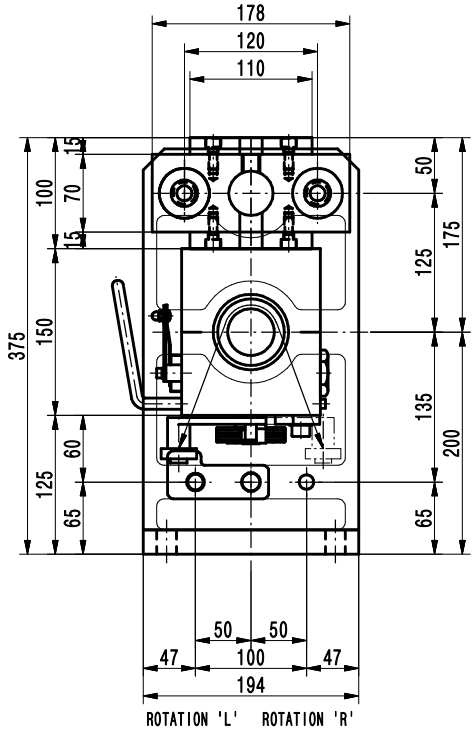

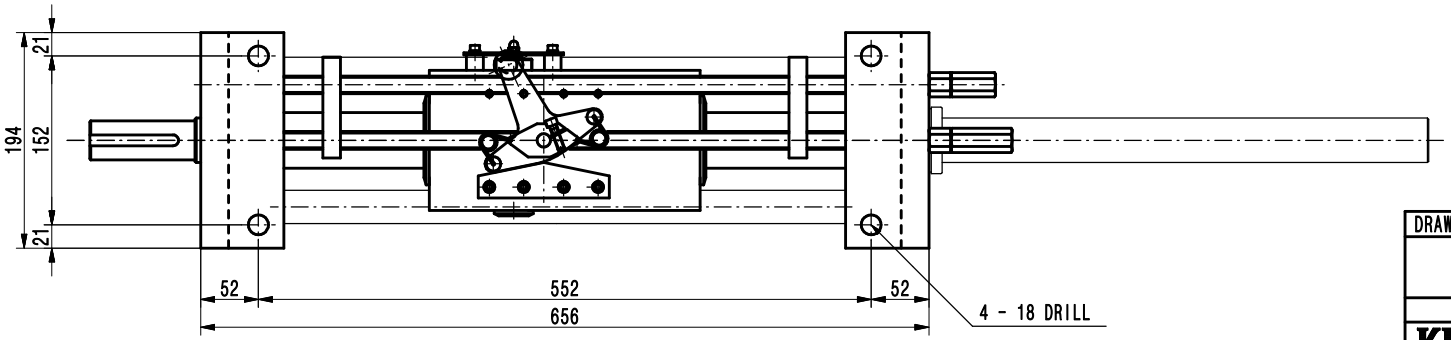

TECHNICAL DATA

Max. DRIVING FORCE	40 kg/f
Max. ROTATION	500 RPM
Max. PITCH	0~38 mm
Max. STROKE	1800 mm

DRAWN	DESIGN	CHECK	APPR.	SCALE	TATLE
				4.0	BALL TRAVERS UNIT (STANDARD TYPE)
				A3	APPLICATION MODEL: KBT4-50F
KRC 한국로보척 KOREA ROBO CHUCK				DATE	2013. 04. 00
				DWG.NO	KBT4-50F-1000