BASIC MODEL : KBT4-60

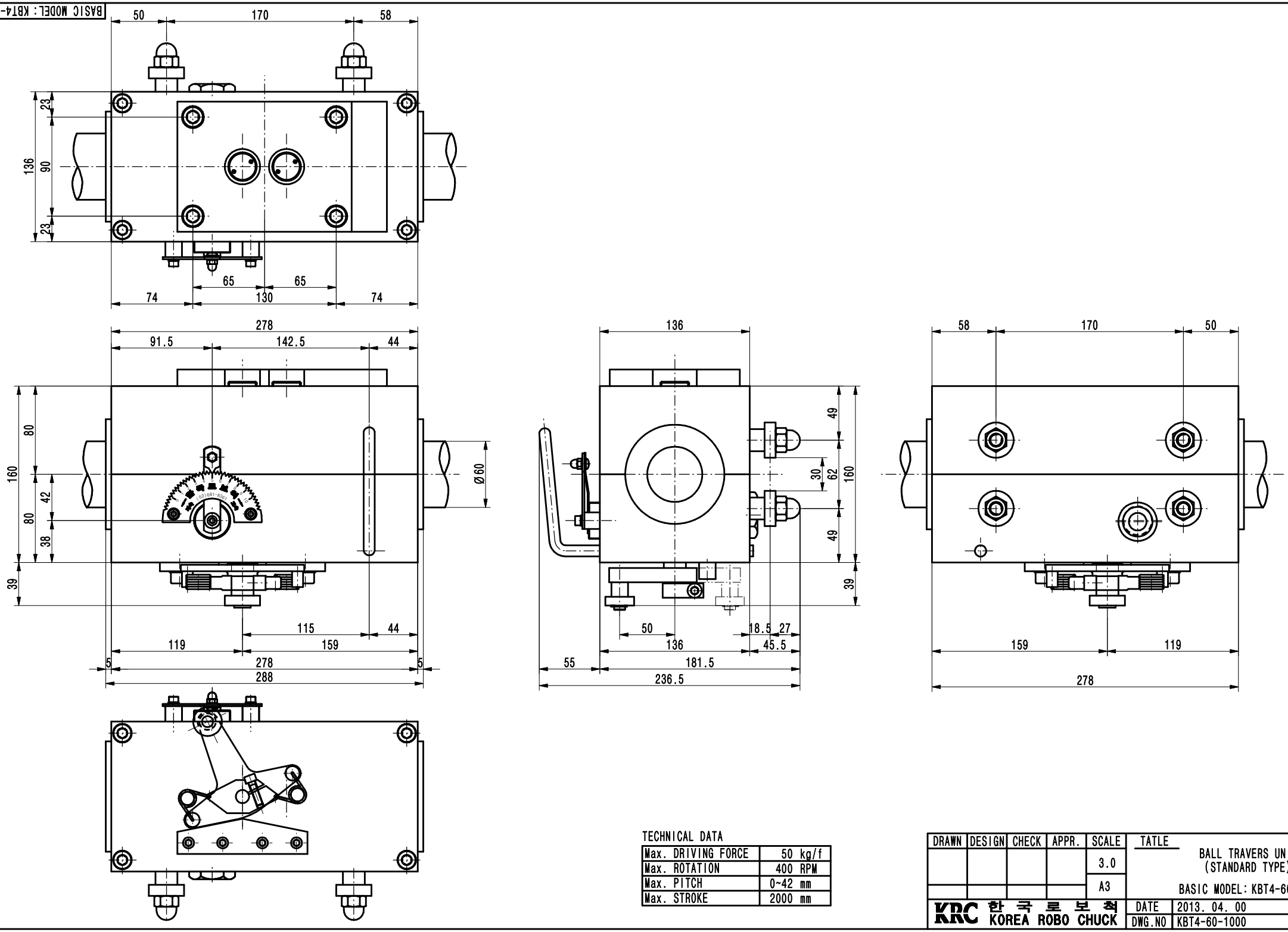

TECHNICAL DATA

Max. DRIVING FORCE	50 kg/f
Max. ROTATION	400 RPM
Max. PITCH	0~42 mm
Max. STROKE	2000 mm

DRAWN	DESIGN	CHECK	APPR.	SCALE	TATLE
				3.0	BALL TRAVERS UNIT (STANDARD TYPE)
				A3	BASIC MODEL: KBT4-60
KRC 한국로보척 KOREA ROBO CHUCK				DATE	2013. 04. 00
				DWG.NO	KBT4-60-1000